ISOQUICK®
Raft Foundation System

Installation Guide
Part 2-Isoquick Installation

Isoquick Installation Guide

Page	Tittle
Installing the Isoquick	
3	Assembly plan
4	Installing the perimeter “Edge Modules”
5	Installing the last “Edge Module”
6	Installing the Base and Top boards
7	Final Checks
Concrete works	
8	Installing the DPM
9	Installing reinforcement
10	Concreting
11	Edge protection and back filling

ISOQUICK® - Ready to install



ISOQUICK® - Deliveries

- Product are usually delivered on pallets for unloading by machine with forks.
- Pallets can be broken down to allow unloading by hand. The individual boards are light weight but bulky.

- Product can be stored outside for extended periods without covers, although care should be taken if high winds are excepted.
- Avoid covering boards made of 200e grade (graphite) EPS with transparent plastic sheeting.

- Boards damaged during transport or handling should be put to one side.
    - Small sections of damage can be repaired with FR PU expanding foam.
    - Larger sections of damage can be cut out and the remainder of the board used

- Cold weather working
    - Care must be taken to avoid ice forming at the base of the pyramids. Boards are shipped with the pyramids face down to help avoid this.
    - If the gaps between the pyramid lugs fill with ice (shown blue below) the boards won't fit together.
    - If Ice does form on the surface it must be removed before the boards are installed.
        - Do not use heat sources >70°C. E,g a hot air gun, gas torch
        - Warm water, sunlight etc are fine.

    - Putting the top layer over the ice filled lugs will protect the ice and stop it from thawing for longer.

    - If you concrete with ice between the layers, eventually the ice will melt, the top layer of Isoquick will drop and the concrete will drop with it.

    - If you leave the Isoquick party installed over night, and exposed pyramids on the over layer boards should be covered, with something, e.g.a tarp, and piece of Dpm, the top layer of boards

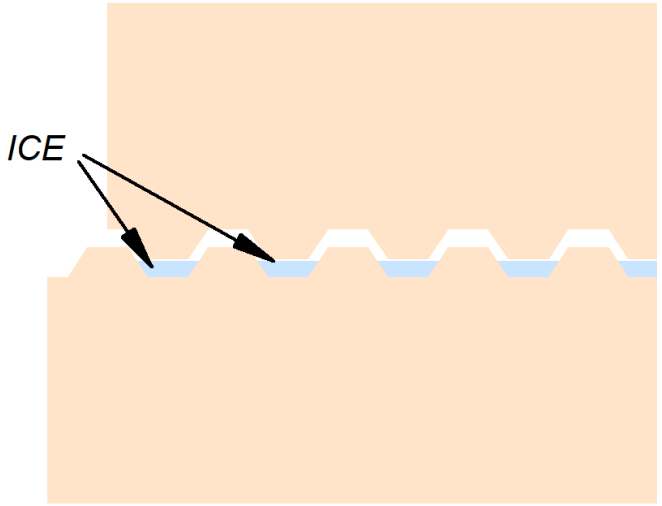

Assembly plan

Each slab is supplied with an Assembly plan. All Corners and non Standard lengths are identified as per the plan.

Starting just before a corner, install the edge pieces in a clockwise direction.

The corner pieces and any irregular pieces will be numbered as per the assembly plan.

Work from the outside of the shuttering to avoid standing on the prepared blinding.

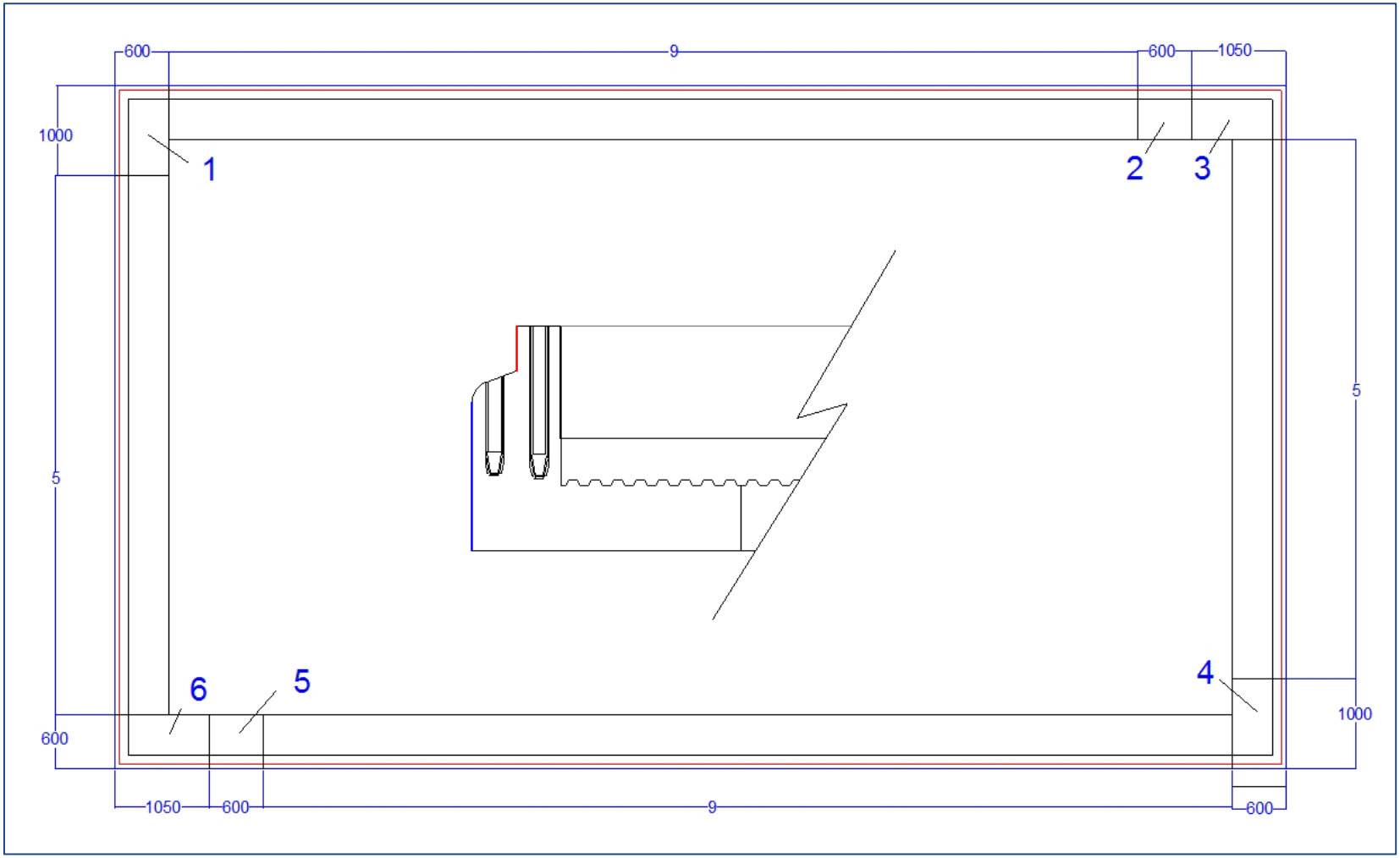

Installing the perimeter “Edge Modules”

The Edge Modules dovetail together, by sliding one modules into the previous module

Keep checking the edges are straight to the string line as you install them.

Using a spirit level up against the inside face of the Edge module to align to the string line is the easiest way to do this.

If you reach a pipe or duct, mark out the position of the edge piece and cut the board to fit around the pipe.

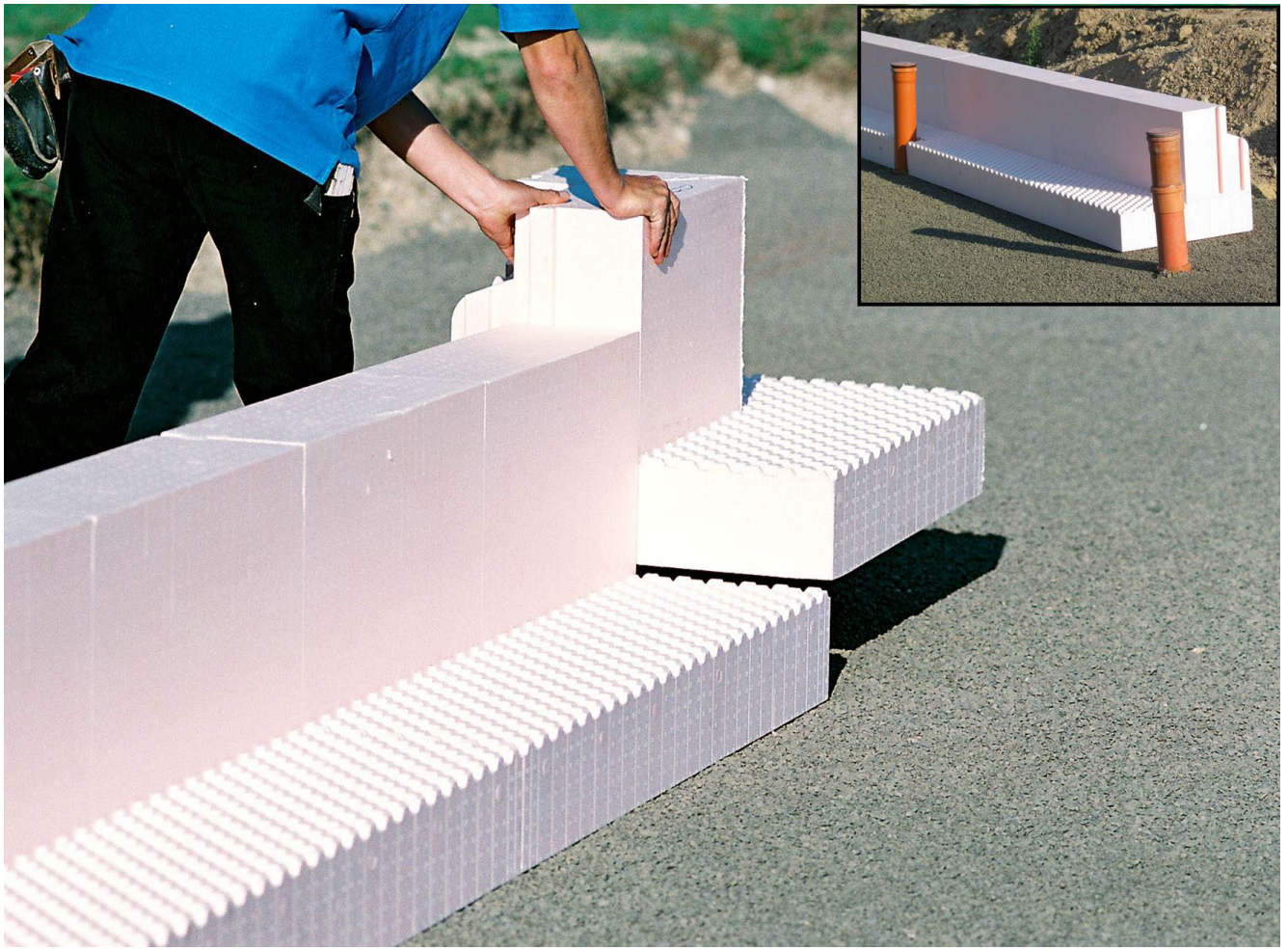

Installing the Base and Top boards

The middle is filled with 2 layers of overlapping boards. The shape of the edge module will automatically create a staggered pattern between the top and bottom layers. Usually the 2 layers are installed at 90 degrees to each other, but this is not critical provided you achieve an overlap between joints.

Starting the base boards in a corner, lay along one edge and complete a row. The last piece will need to be cut to size to complete the row. This cut will be a multiple of 50mm. The flat side of the Isoquick boards is marked with a grid pattern to help you measure and cut a straight line. Take the off cut from the end of the 1st row and use it to start the 2nd row.

As you lay boards, continue to check they are running straight and square, and that the pyramid shaped lugs on each board align with the neighbouring boards. Avoid trapping the blinding between boards.

If leaving the base partly installed overnight, and low temperatures are predicted, take precautions to avoid ice forming between the pyramid shaped lugs. E.g. cover any exposed pyramids with dpm, a tarpulain, boards with the pyramids facing down.

If ice does form between the lugs of the base layer, be must be removed or allowed to thaw before the top layer is installed.



<u>Cutting the Boards.</u>

Cutting the boards straight and perpendicular is important to ensuring they fit together neatly without gaps. Isoquick recommend the use of hot wire cutters to achieve best results.

Installing the Base and Top boards

The middle is filled with 2 layers of overlapping boards. The shape of the edge module will automatically create a staggered pattern between the top and bottom layers. Usually the 2 layers are installed at 90 degrees to each other, but this is not critical provided you achieve an overlap between joints.

Starting the base boards in a corner, lay along one edge and complete a row. The last piece will need to be cut to size to complete the row. This cut will be a multiple of 50mm. The flat side of the Isoquick boards is marked with a grid pattern to help you measure and cut a straight line. Take the off cut from the end of the 1st row and use it to start the 2nd row.

As you lay boards, continue to check they are running straight and square, and that the pyramid shaped lugs on each board align with the neighbouring boards. Avoid trapping the blinding between boards.

Once you have 2 rows of base boards installed you can install the 1st row of top boards.

To ensure the lugs to sit together the 2 layers have to be offset by 25mm. To achieve this cut the 1st top board lengthways, so each half is an odd multiple of 25mm. e.g. using 1 cut, slice a full board into 2 pieces, one which is 525mm wide and another which is 75mm wide.
Put the cut surface up against the edge module, to start the 1st row and then place full boards until you nearly reach the end. The gap at the end will be an odd multiple of 25mm. Cut a board to fit and use the offcut to start the next row.

Repeat this process until the middle is filled.



<u>Cutting the Boards.</u>
Cutting the boards straight and perpendicular is important to ensuring they fit together neatly without gaps. Isoquick recommend the use of hot wire cutters to achieve best results.

Final Checks

Having filled the middle, double check you are happy with the position of the pipes and ducts, then seal with Expanding PU foam.

The Isoquick shutter is now ready for damp proof membrane and reinforcement.

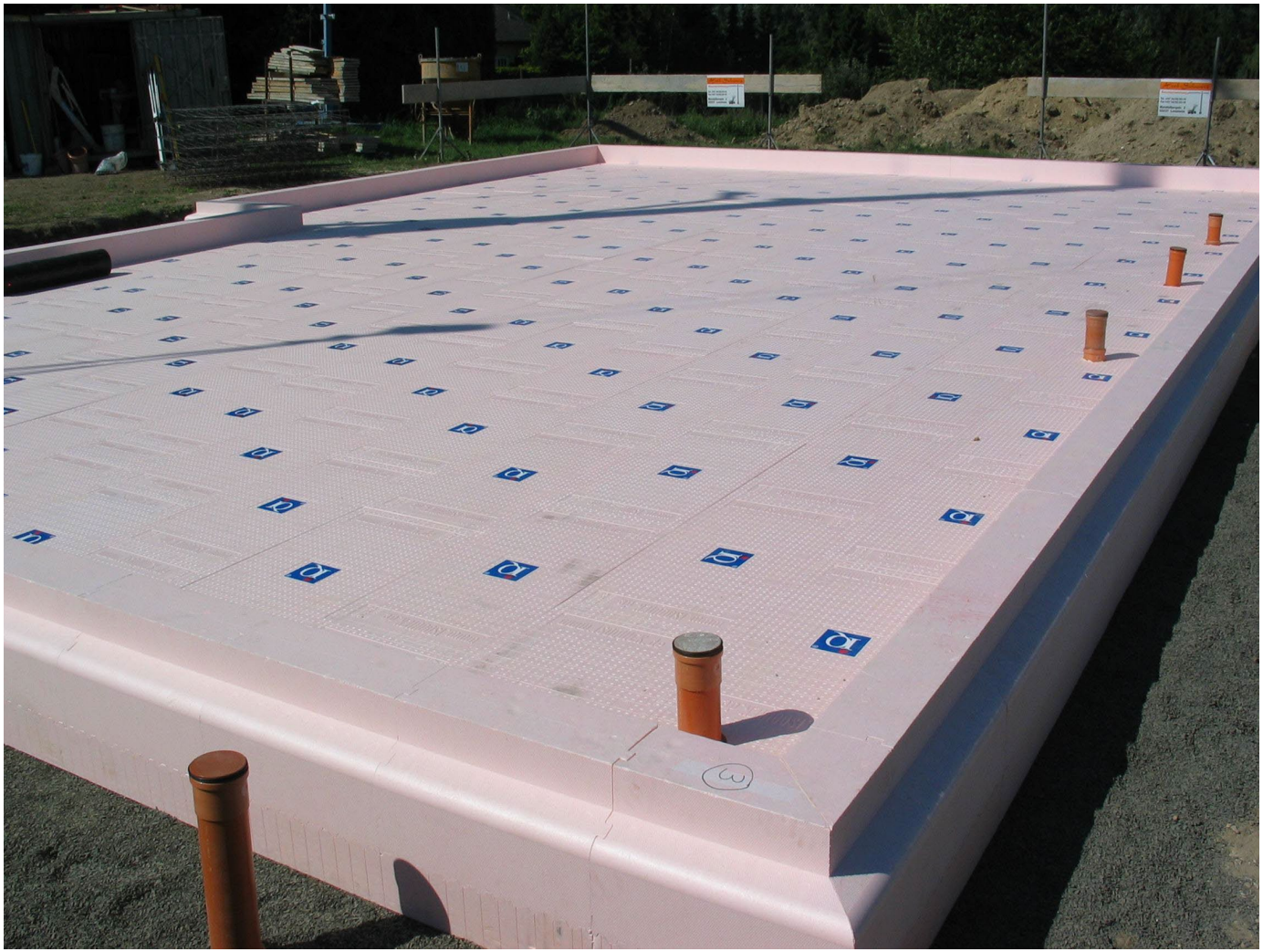

Installing the DPM

Lay the damp proof membrane on top of the Isoquick taking care to form corner neatly and seal properly around pipes and ducts.

Leave enough membrane at the perimeter to protect the edge from excess concrete.

The damp proof membrane can be created with either suitable plastic sheets, self adhesive membranes, liquid applied membranes (with crack sealing capabilities) or water resistant concrete to BS8102



Installing reinforcement

The concrete slab must be reinforced in line with the structural engineer's recommendations.
This usually involves using A393 fabric reinforcement top and bottom, with additional reinforcement where heavily loaded.

Isoquick recommend appropriately sized "concrete bar" spacers under the bottom layer of fabric reinforcement to spread any point load and protect the membrane.

Isoquick recommend the use of "flying end" fabric sheets to help minimise the build up of layers at overlaps.

Tip: Place a scaffold board (or similar) on edge up against the inner face of the Isoquick edge module. Place the fabric mesh up against the timber and then remove the timber. This will protect the membrane from damage and ensure the fabric is properly spaced from the concrete edge.



Once the top layer of fabric installed, use a string line from edge to edge, or a laser level to double check the cover between the top of the reinforcement and the concrete. Adjust if necessary.

Concreting

The concrete specification will form part of the details provided by the engineer. Typically this will be RC28/35. Isoquick recommend the use of max. 10mm aggregate to aid concrete cover.

The concrete slab should be placed in one continuous operation, using normal concreting techniques, including the use of vibrating pokers, power floats and bunyan strikers as required.

The Isoquick Edge Modules will support the use of highly fluid, self placing, mixes without additional perimeter form support.

Additional form support may be required at bespoke details, e.g. thinner than normal edges, door thresholds etc. The Assembly plan will indicate where this is required.



Edge protection and back filling

Prior to backfilling the exposed perimeter of the Isoquick edge modules will require protection from UV light and mechanical damage.

This can be provided by:

- Water resistant polymer render,
  e.g. Aquabase EWI-226
- Multiple coats of solvent free bitumen, reinforced with fibre glass scrim, or
- Cement slurry,
  e.g. Aquamat elastic

The perimeter of the building shall then be backfilled and compacted with a free draining stone, or “no–fines” (permeable) concrete.

These 2 layers will divert water away from the insulation and provide mechanical protection.



The Insulated Raft



ISOQUICK®

For more info visit

www.isoquick.co.uk